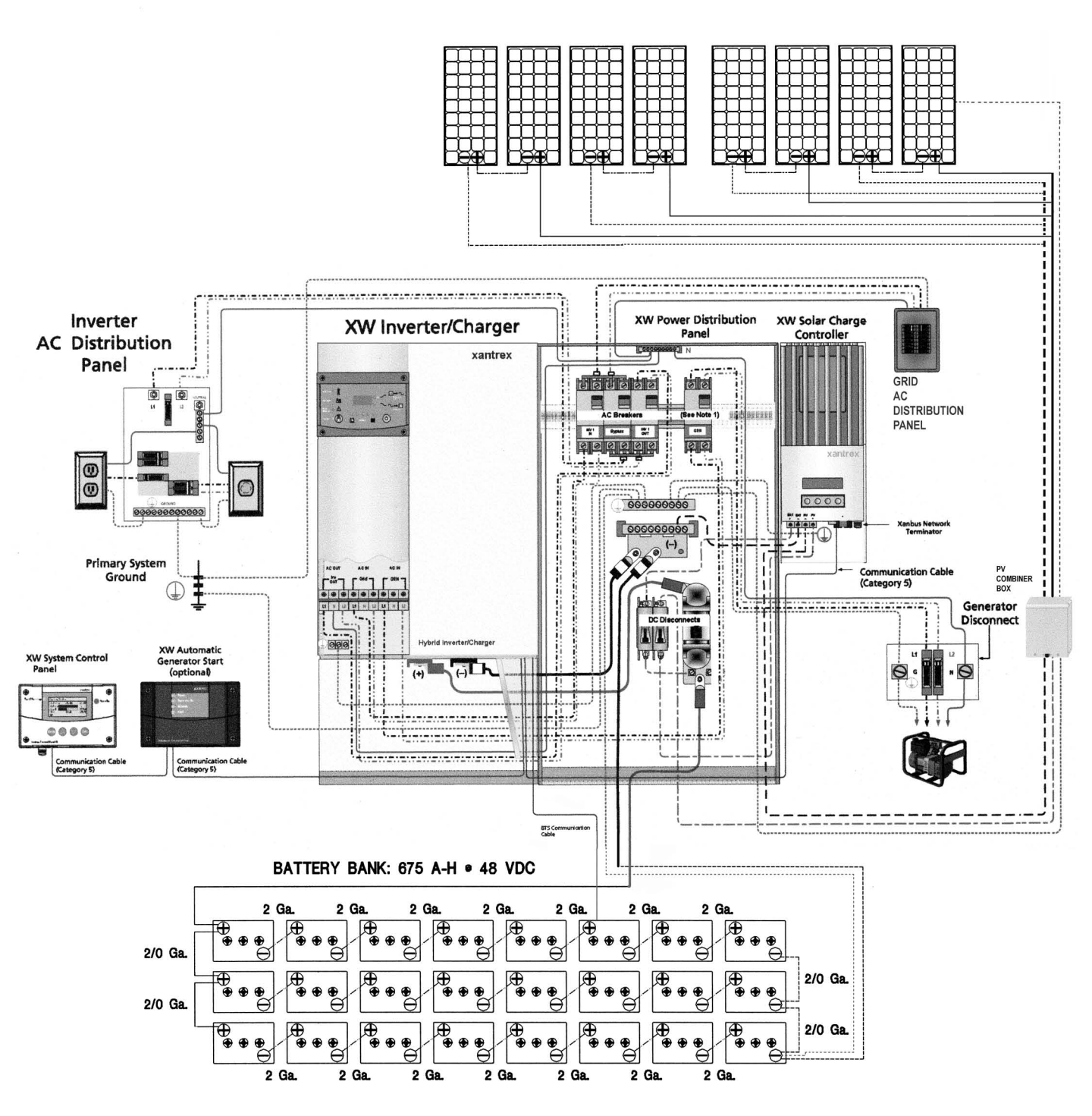
Inverter
AC Distribution
Panel
XW Inverter/Charger
xantrex
XW Power Distribution
Panel
XW Solar Charge
Controller
GRID
AC
DISTRIBUTION
PANEL
AC Breakers
(See Note 1)
Xanbus Network
Terminator
Primary System
Ground
Communication Cable
(Category 5)
PV
COMBINER
BOX
Generator
Disconnect
DC Disconnects
Hybrid Inverter/Charger
XW System Control
Panel
XW Automatic
Generator Start
(optional)
Communication Cable
(Category 5)
Communication Cable
(Category 5)
BTS Communication
Cable
BATTERY BANK: 675 A-H • 48 VDC
2 Ga.
2/0 Ga.